Time is in seconds

| Res R8 | | Cap C1 | | |
|---|---|---|---|---|
| | | 6.8uF | 4.7uF | 2.2uF |
| | 2M2 | 16.0 | 11.8 | 5.6 |
| | 1M | 7.8 | 5.5 | 2.5 |
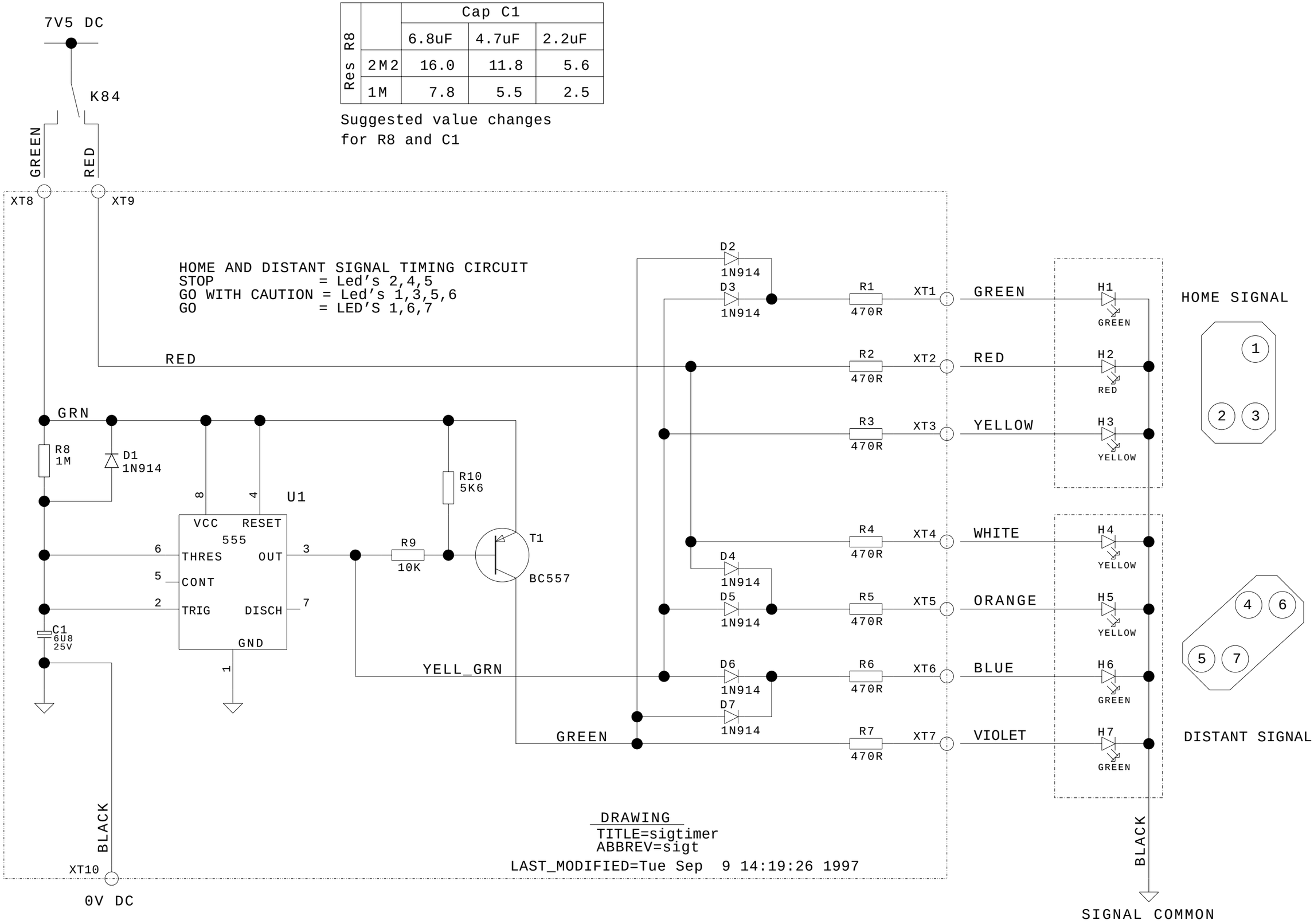
Suggested value changes
for R8 and C1